Network Services

Lecture 7

IP + Fragmentation + ICMPv4 + Mobile IP

Lecturer: Dr. Khaled BinAbdl

IP Protocol

Internet Protocol (IP)

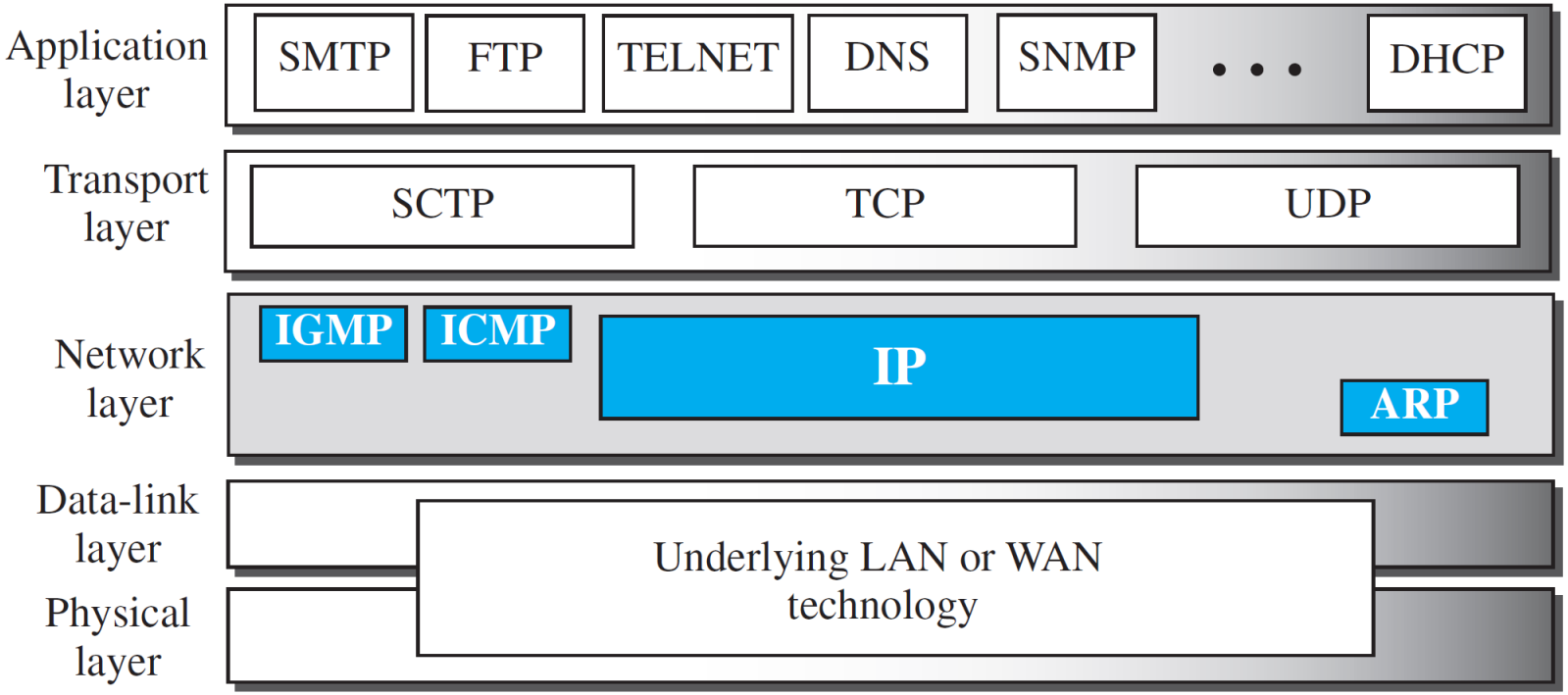

Position of IP and other network-layer protocols in TCP/IP protocol suite

IP Datagram Format

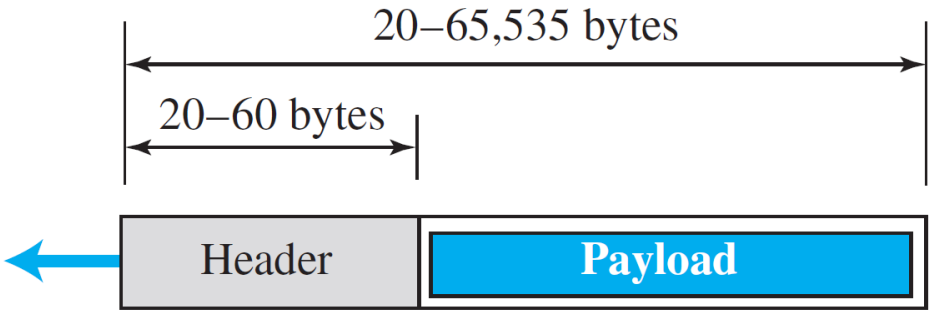

a. IP datagram

Legend

VER: version number
HLEN: header length
byte: 8 bits

Flags D M

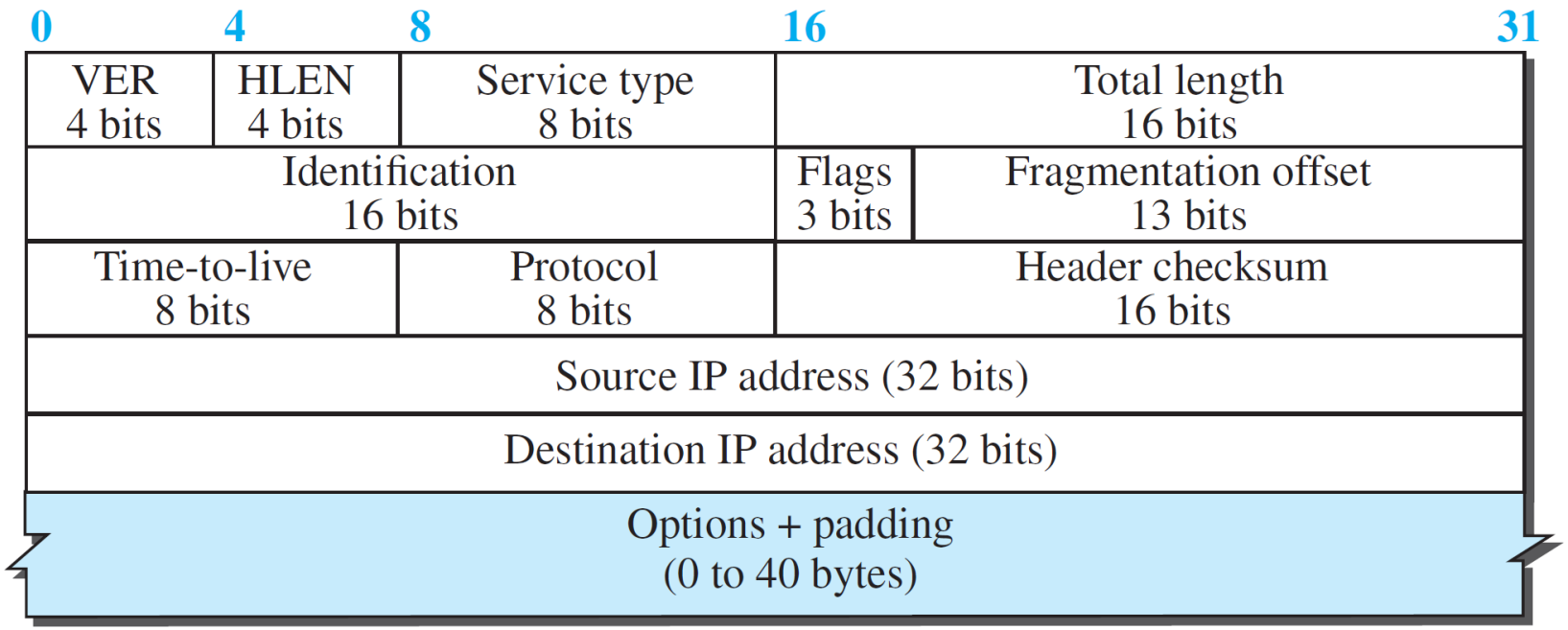

b. Header

Example of checksum calculation in IPv4

4	5	0	28
49.153		0	0
4	17	0	
10.12.14.5			
12.6.7.9			

4, 5, and 0 →		4	5	0	0
28 →		0	0	1	C
1 →		C	0	0	1
0 and 0 →		0	0	0	0
4 and 17 →		0	4	1	1
0 →		0	0	0	0
10.12 →		0	A	0	C
14.5 →		0	E	0	5
12.6 →		0	C	0	6
7.9 →		0	7	0	9
Sum →	1	3	4	4	E
Wrapped sum →		3	4	4	F
Checksum →		**C**	**B**	**B**	**0**

Replaces 0

Multiplexing and De-multiplexing using the value of the protocol field

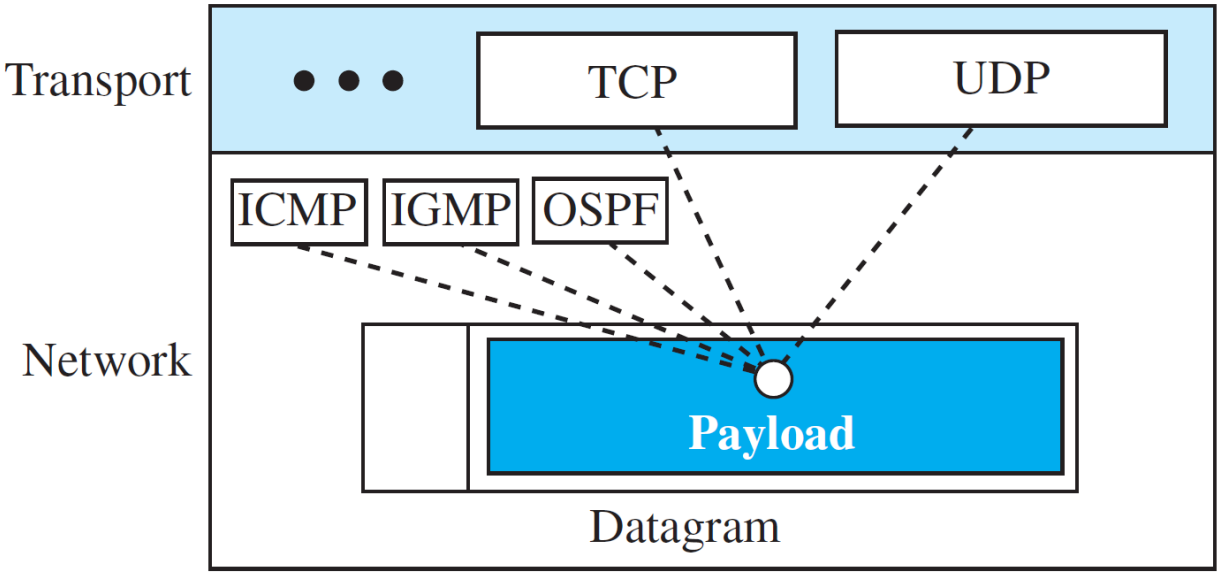

Some protocol values

ICMP	01
IGMP	02
TCP	06
UDP	17
OSPF	89

Fragmentation

Maximum Transfer Unit (MTU):

Ethernet (Min = 46bytes , Max = 1500bytes)

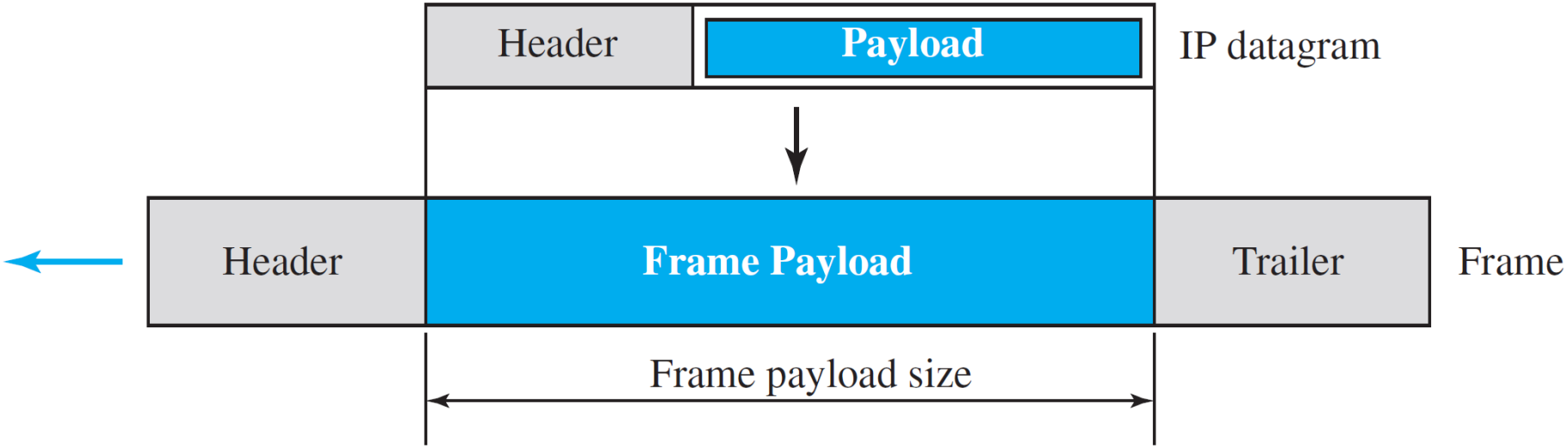

MTU: Maximum size of frame payload

Fragmentation Example

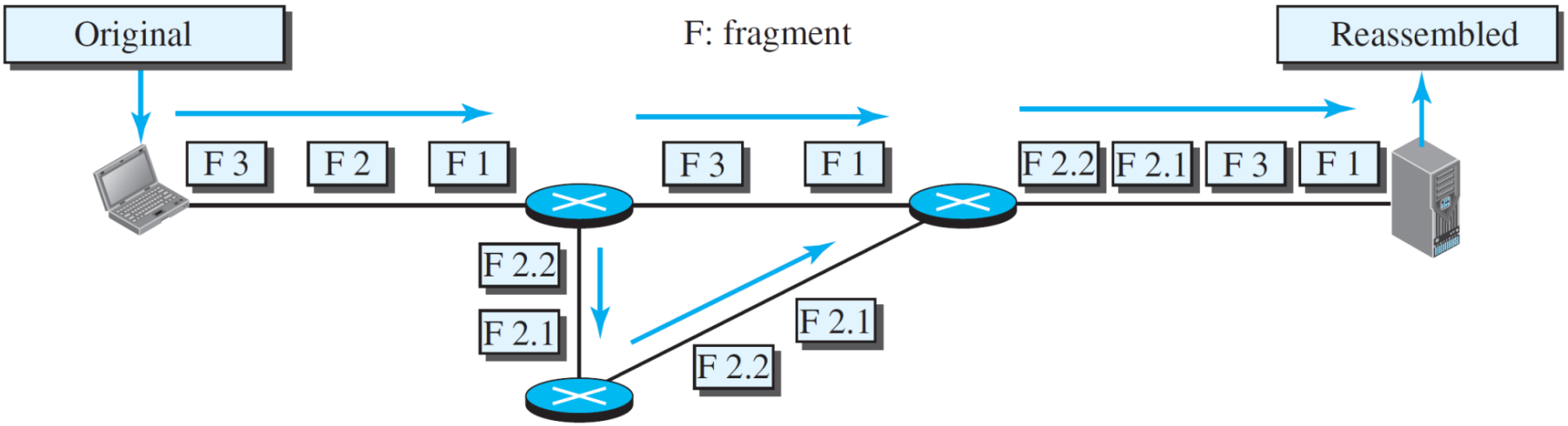

Fragmentation Example

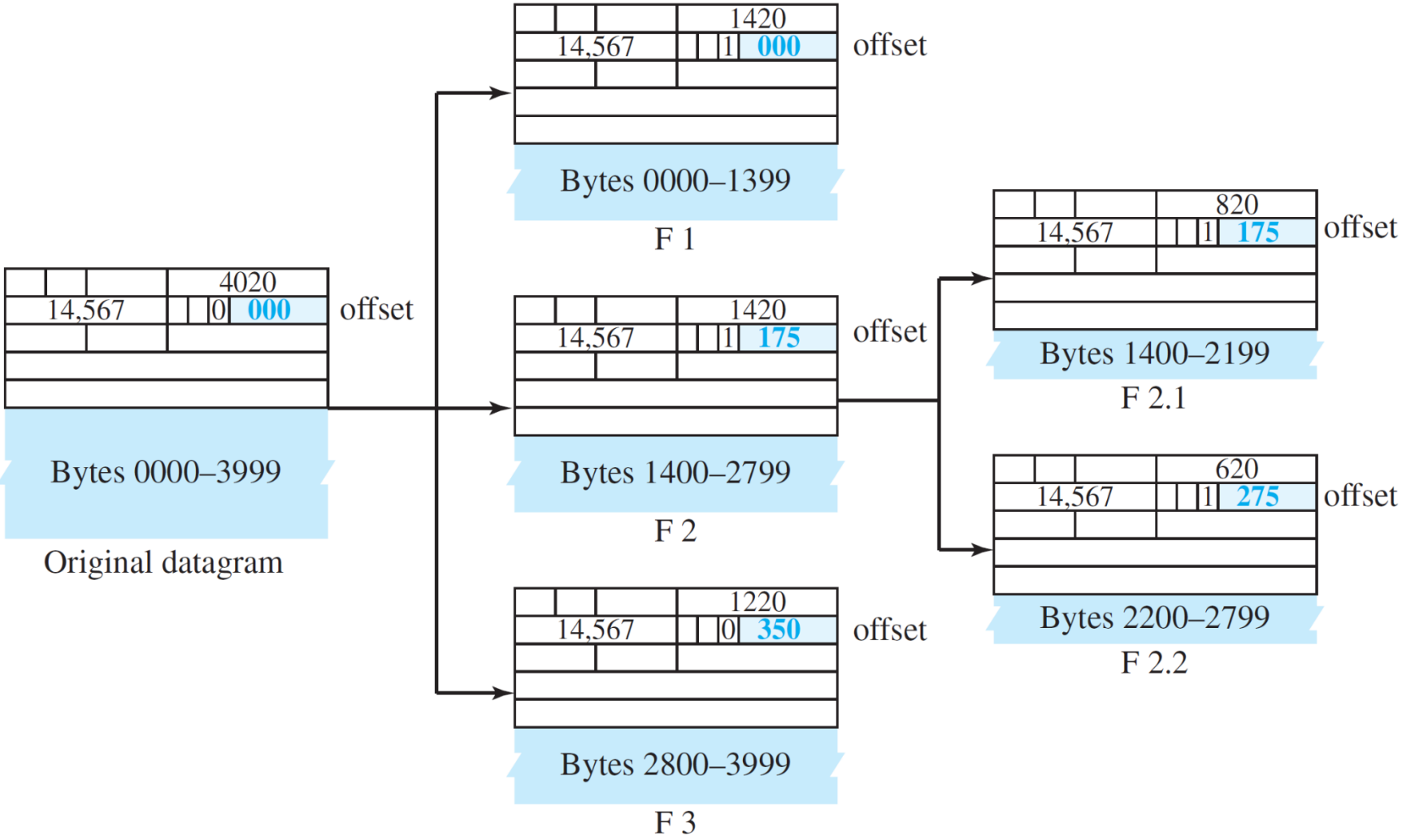

ICMPv4 + Mobile IP

Internet Control Message Protocol (ICMP)

- What happens if a router must discard a datagram because
  - it cannot find a route to the final destination, or
  - the time-to-live field has a zero value?

- What happens if the final destination host must discard the received fragments of a datagram because it has not received all fragments within a predetermined time limit?

ICMP

- A host **sometimes** needs to **determine** if a **router** or another host is **alive**.
- And sometimes a network manager needs information from another host or router.
- **One** of the main **responsibilities** of **ICMP protocol** is to report some **errors** that may **occur** during the processing of the IP datagram.

Debugging Tools

- We can use the ***ping*** program to find if a host is alive and responding.

- The source host sends ICMP echo-request messages; the destination, if alive, responds with ICMP echo-reply messages.

Traceroute or Tracert

- The ***traceroute*** program in UNIX or ***tracert*** in Windows can be used to trace the path of a packet from a source to the destination.
- The ***traceroute*** program is **different** from the ***ping*** program.
- The ***ping*** program gets help from two **query messages**;
- The ***traceroute*** program **gets** help from two **error-reporting messages**:
  - **time-exceeded**
  - **destination-unreachable**.

Use of ICMPv4 in traceroute

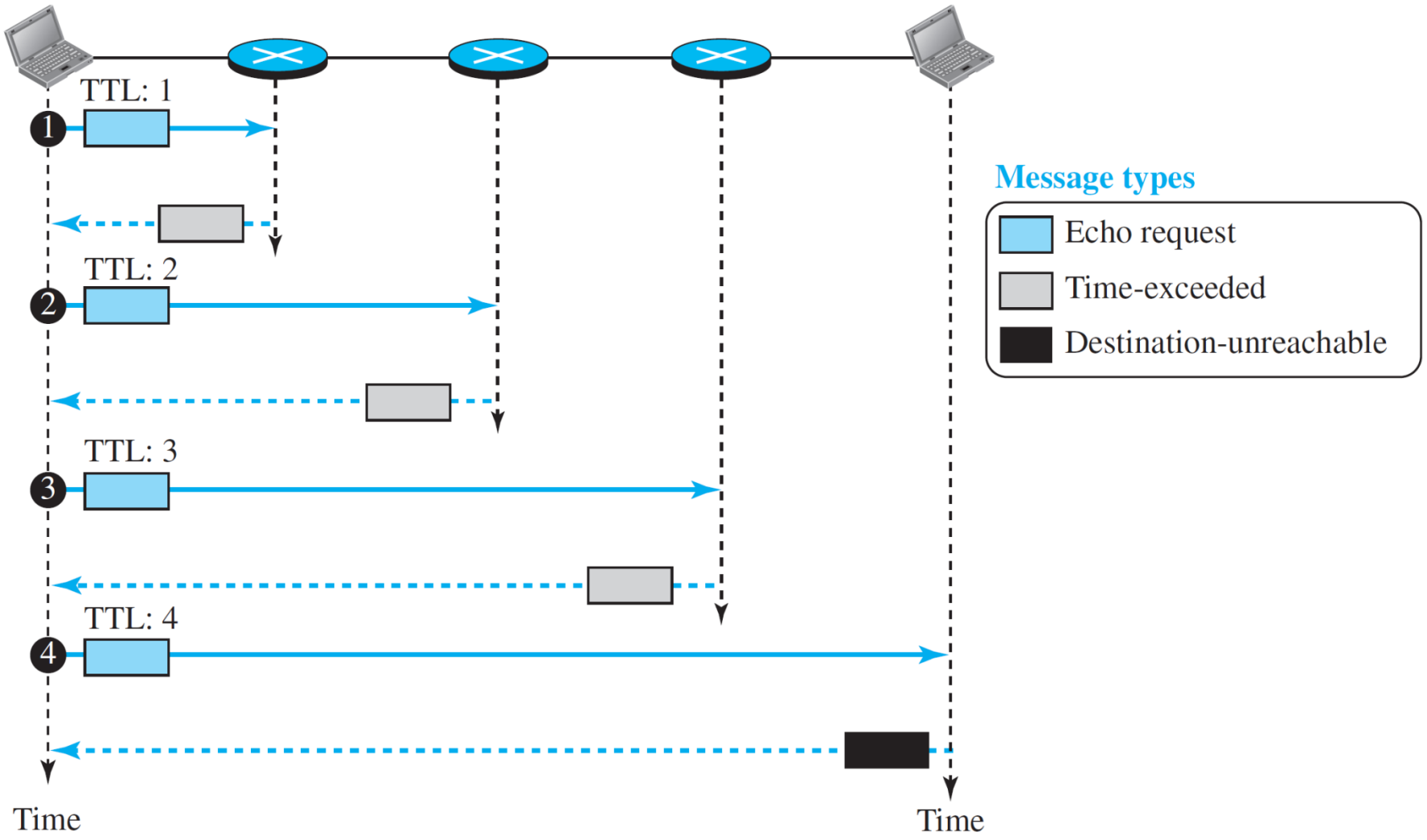

MOBILE IP

- Mobile IP, the extension of IP protocol that allows mobile computers to be connected to the Internet at any location where the connection is possible.

- The main problem that must be solved in providing mobile communication using the IP protocol is addressing.

Addressing Mobile Hosts

- When a host moves from one network to another, the IP address of the Mobile hosts needs to be modified. Several solutions have been proposed.

- ***Changing the Address.***
- ***Two Addresses.***

Changing the Address

- One simple solution is to let the **mobile host** change its address as it goes to the new network.

- The host can use DHCP to obtain a new address to associate it with the new network.

Changing the Address Drawbacks

- **First**, the configuration files would need to be changed.
- **Second**, each time the computer moves from one network to another, it must be rebooted.
- **Third**, the DNS tables need to be revised so that every other host in the Internet is aware of the change.
- **Fourth**, if the host roams from one network to another during a transmission, the data exchange will be interrupted.

Two Addresses

- The **approach** that is more **feasible** is the use of two addresses.
- The host has its **original** address, called the **home address,** and a temporary address, called the **care-of address.**
- The **home address** is **permanent**;
- The **care-of address** is **temporary**.
- When a **host moves** from one network to another, the **care-of address changes** as the **mobile host moves from one network to another**.

Home address and care-of address

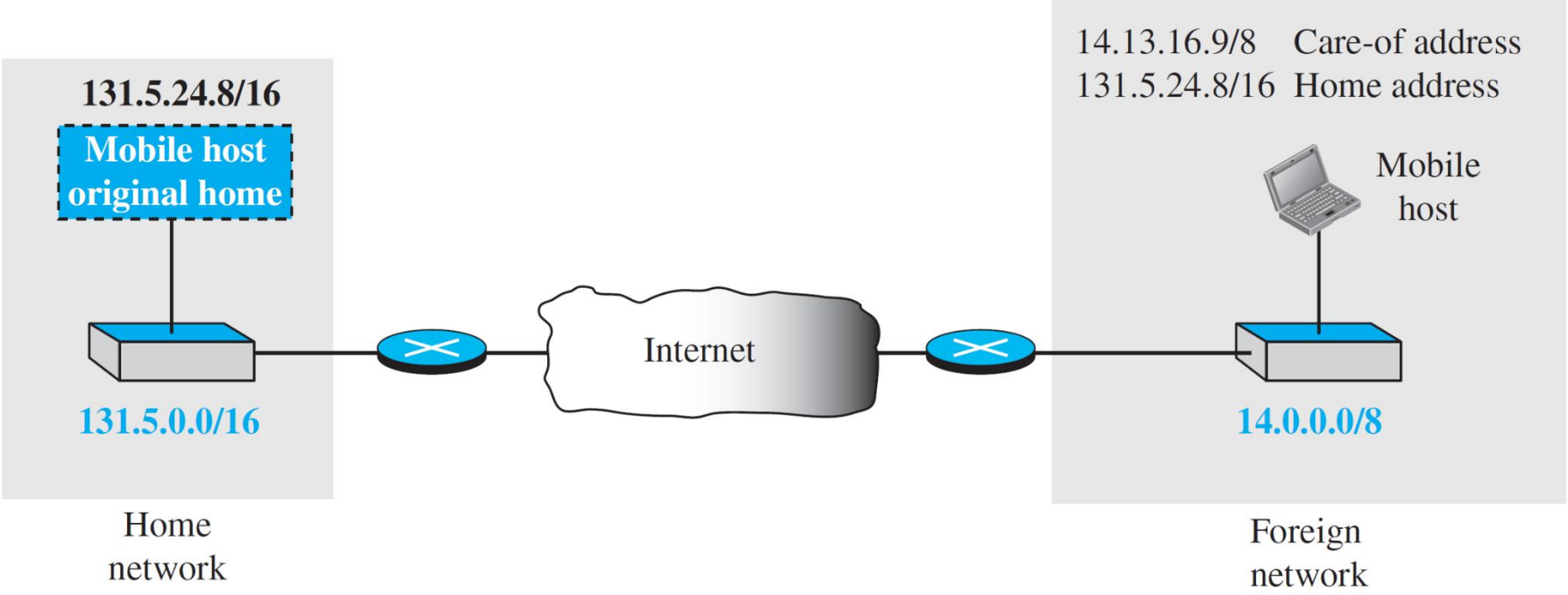

Agents

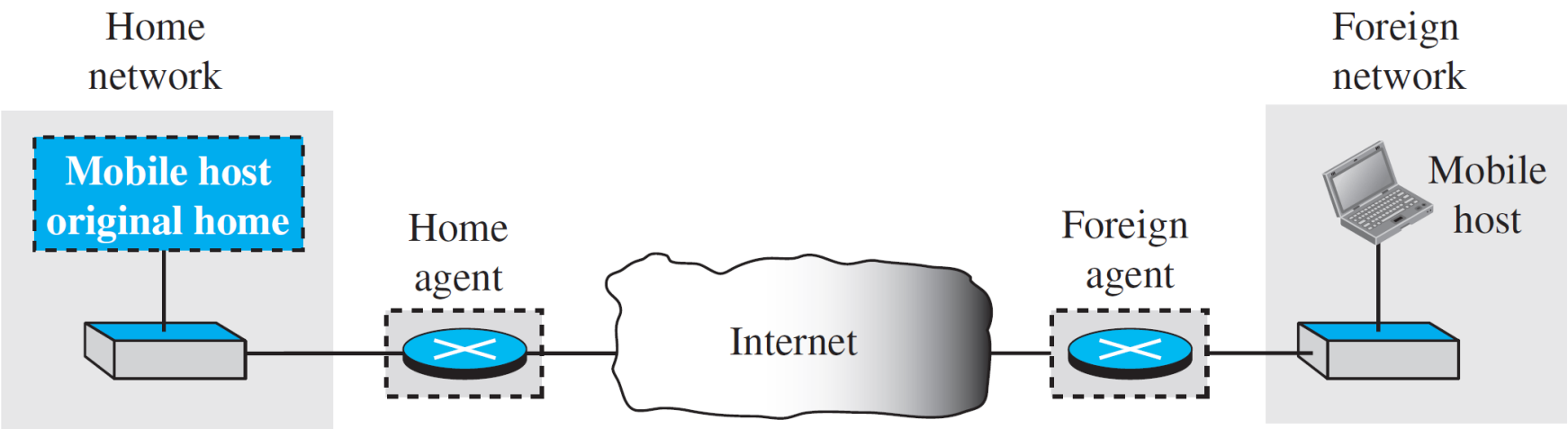
Home network
Mobile host original home
Home agent
Internet
Foreign agent
Foreign network
Mobile host

Three Phases of Remote host and mobile host communication

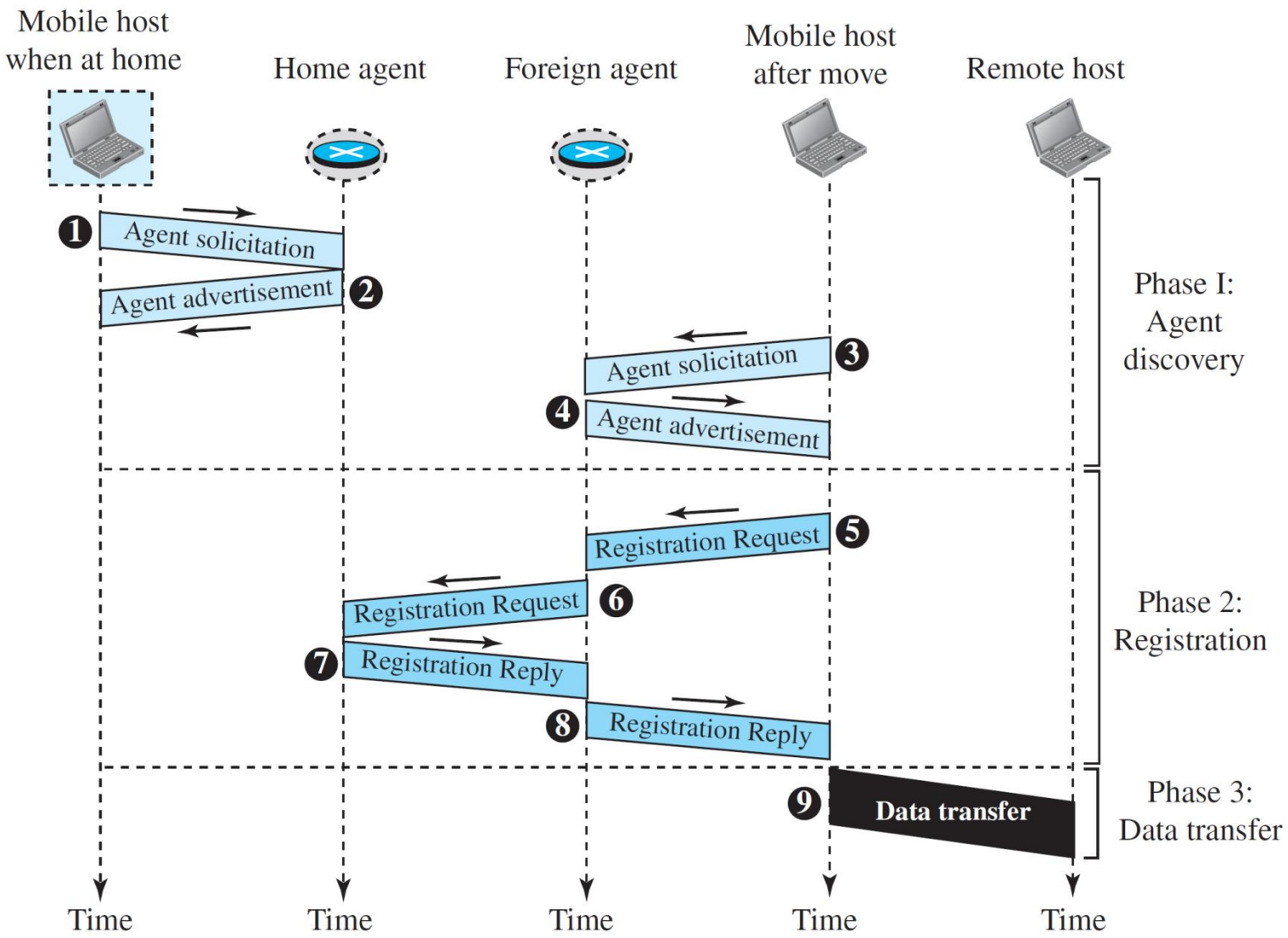

Data transfer

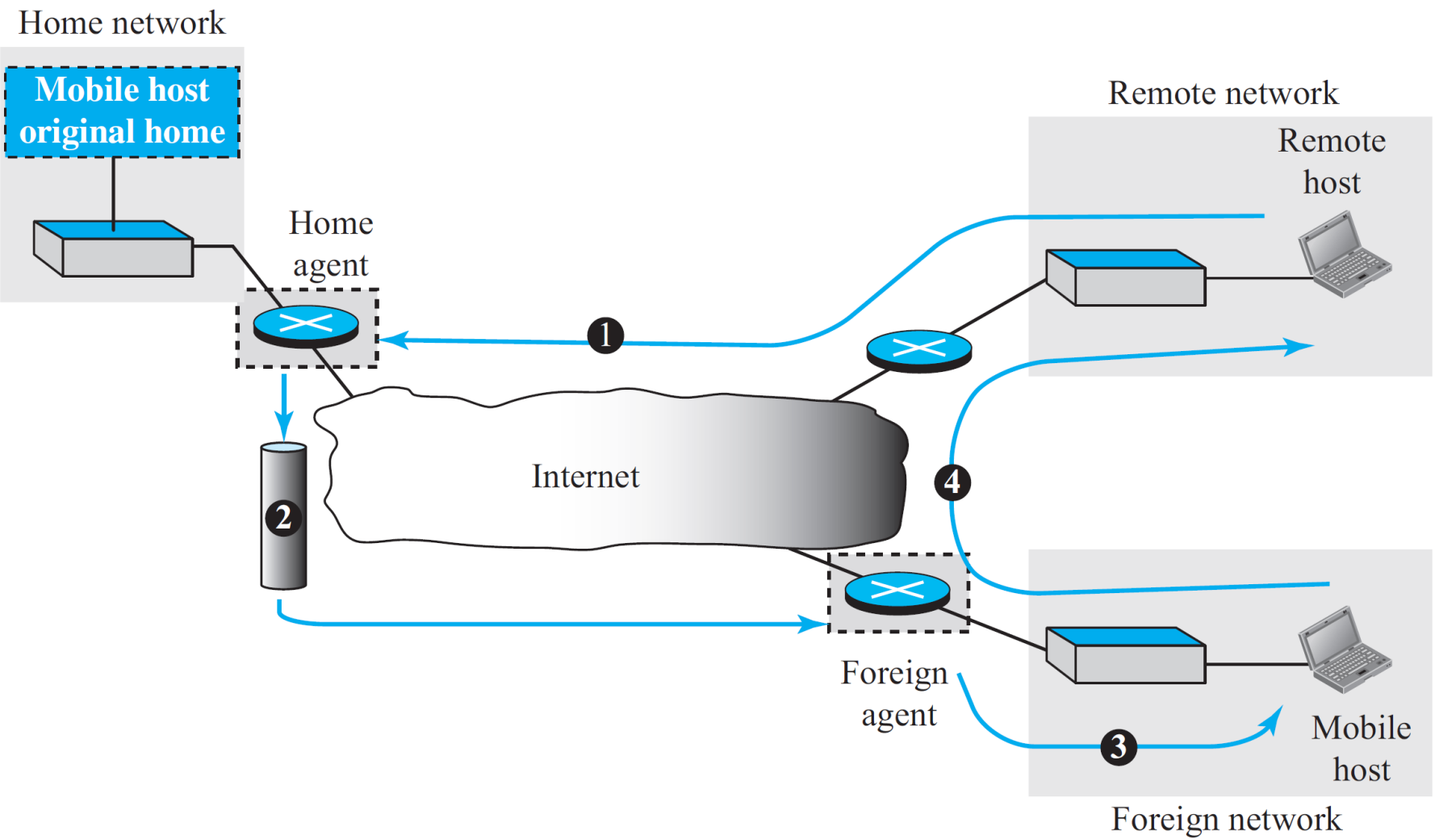

Discussion